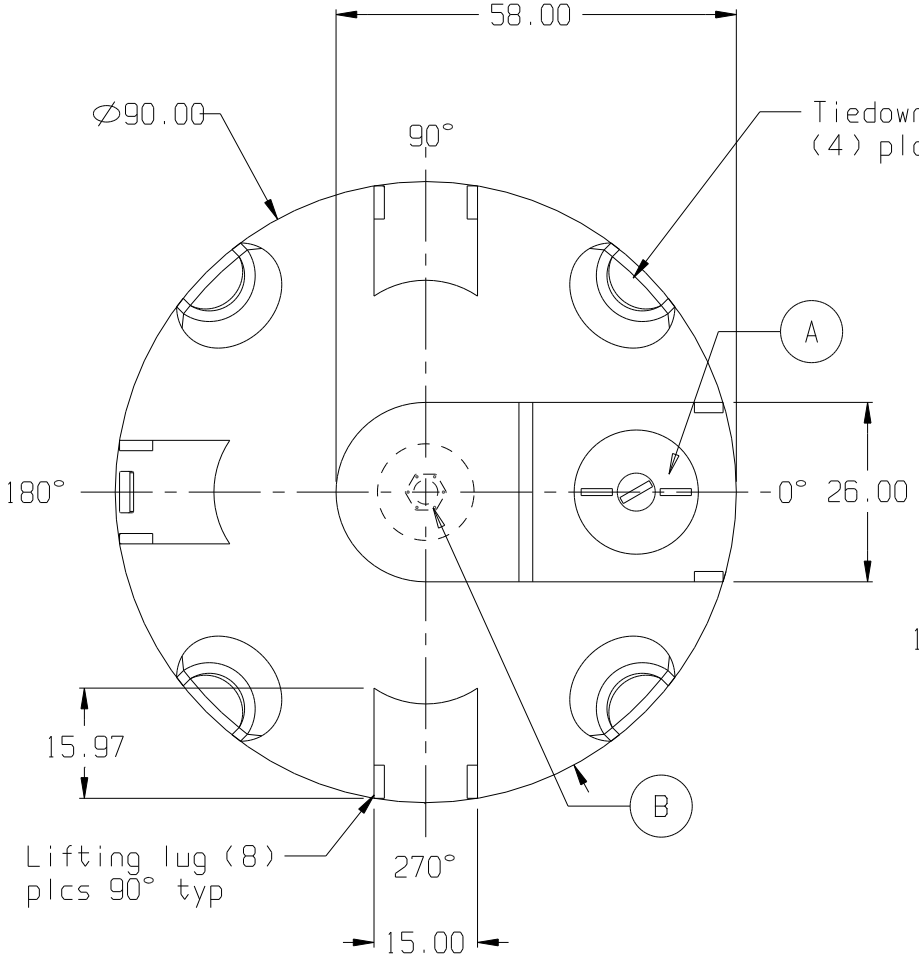

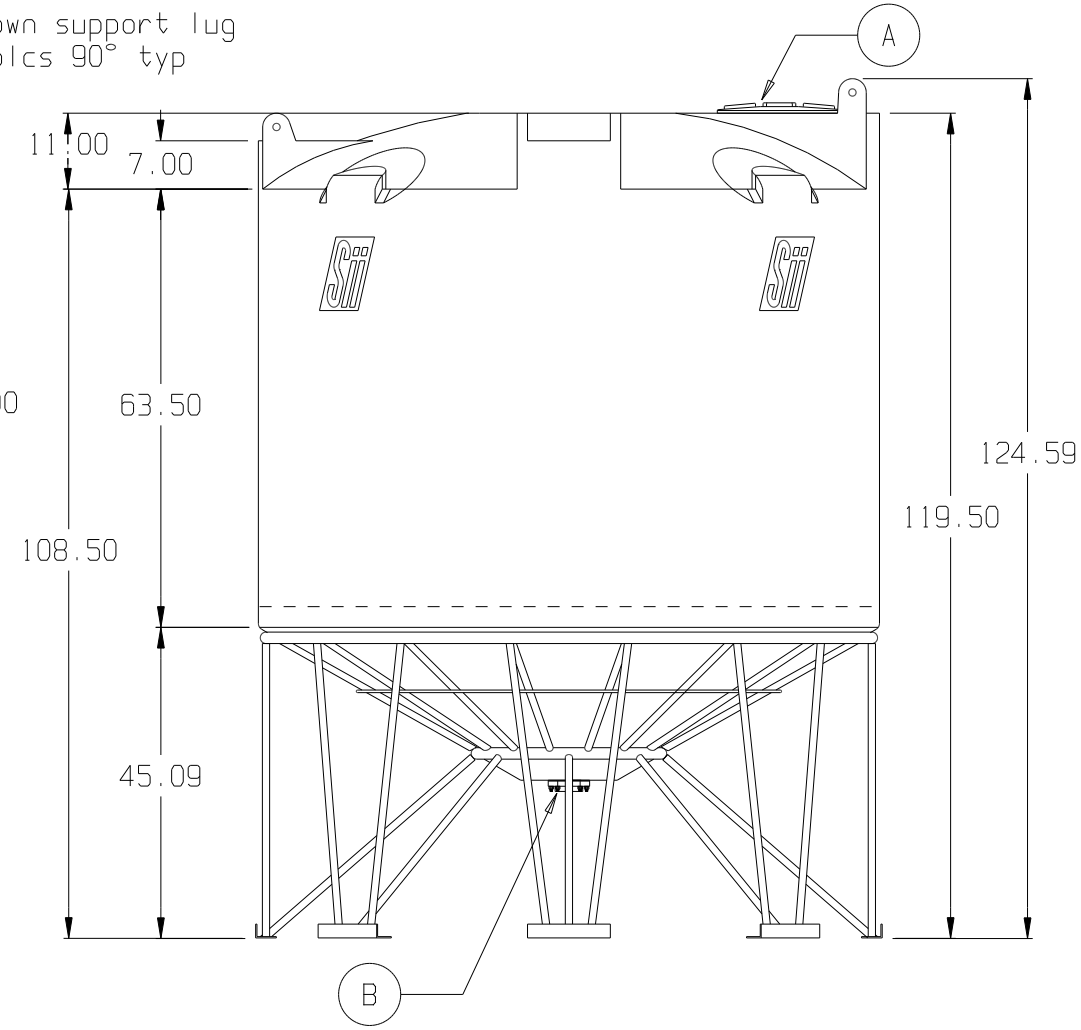

STANDARD OUTLET SPECIFICATION * 0 *

A. 18" PE THREADED-VENTED MANWAY W/15" ACCESS [P/N 34700087]
B. 3" PP DBL FLANGED BOLTED BOTTOM DRAIN FTG W/EPDM GASKETS & SS BOLTS [P/N 34100117]

* BASE FITTINGS TO BE LEFT INSTALLED AT TIME OF SHIPMENT PER SII PROCEDURE
* Consult Snyder's Guidelines for Use and Installation prior to delivery.
Available on-line at www.snydernet.com

(all dimensions in inches)

2,000 GALLON 30° CONE BOTTOM TANK W/STAND

PART #S TANK: 5070000C-- (L)
STAND: 79100000 (L)
REF#: 0000 12/01/05

SNYDER INDUSTRIES INC.