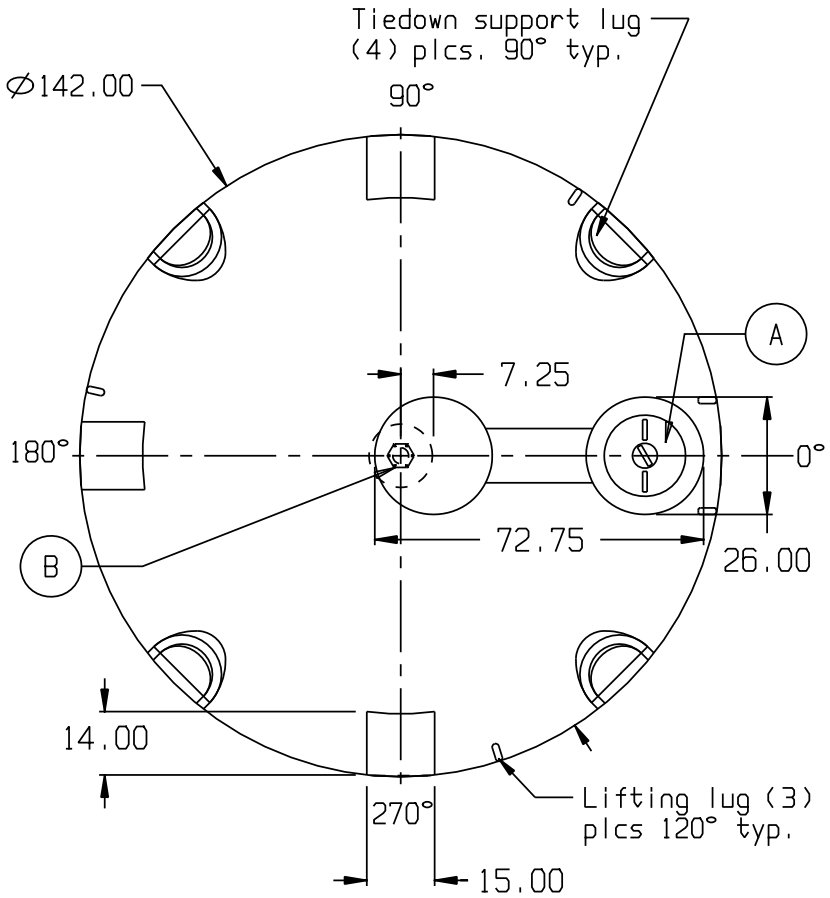

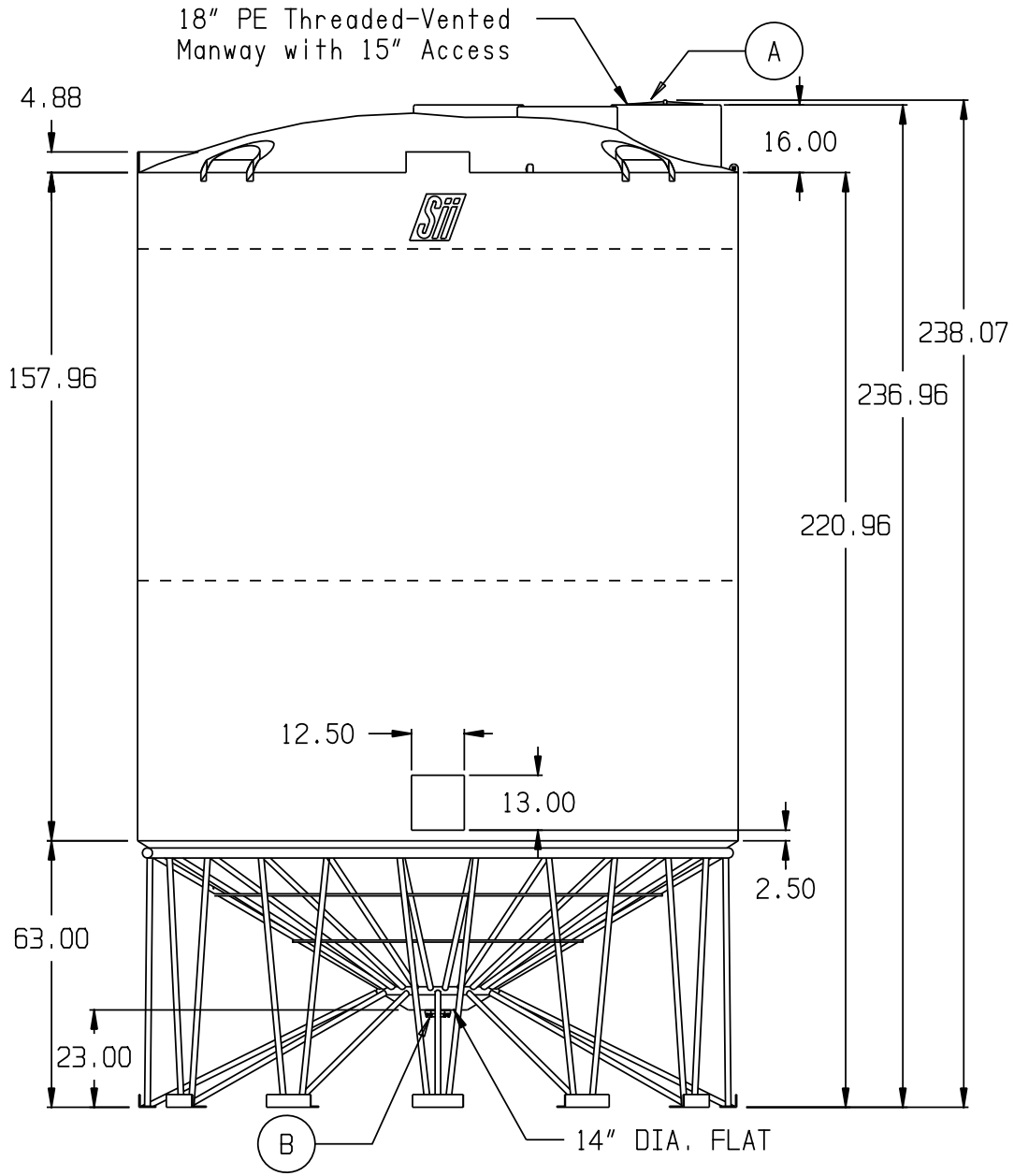

STANDARD OUTLET SPECIFICATION * □ *

A. 18" PE THREADED-VENTED MANWAY W/15" ACCESS [P/N 34700087]
B. 3" PP DBL FLANGED BOLTED BTM DRAIN FTG W/EPDM GASKETS & SS BOLTS <BJO #BF335BD> [P/N 34100006]

* BASE FITTINGS TO BE LEFT INSTALLED AT TIME OF SHIPMENT PER SII PROCEDURE
* Consult Snyder's Guidelines for Use and Installation prior to delivery. Available on-line at www.snydernet.com

ALL DIMENSIONS, DESIGNS, AND INFORMATION ON THIS PRINT MUST BE CONSIDERED PROPRIETARY TO SNYDER INDUSTRIES, INC. AND MAY NOT BE USED, COPIED, OR DISTRIBUTED WITHOUT WRITTEN PERMISSION OF AN OFFICER (OR HIS AGENT) OF THE FIRM.

(all dimensions in inches)

11,850 GALLON 30° CONE BOTTOM TANK W/STAND

PART #S TANK: 5340000C-- (L)

STAND: 79500000

REF#: 00000 09/12/11

SNYDER INDUSTRIES INC.